WIRING DIAGRAM

CMF-PG, MBHA and MBBA Models for Burner Assemblies

NOTES:

1. If any of the original wire has been supplied with the appliance and must be replaced, replace with 105° C thermoplastic type wiring or its equivalent.

2. Incoming power must be polarized. Observe color coding. (See furnace operating plate for electrical data.)

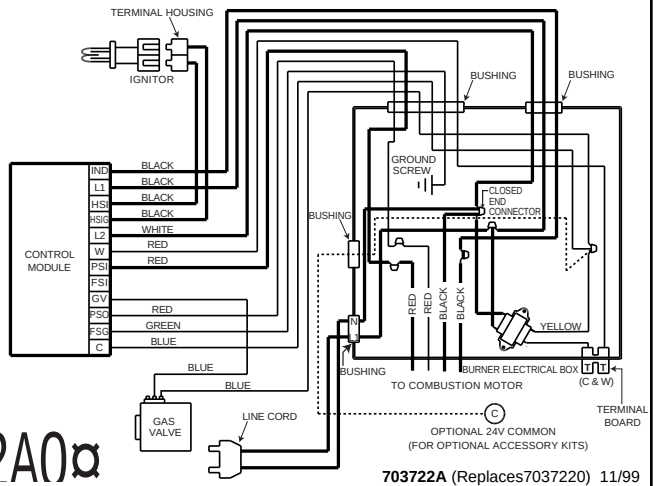

¢703722A0¤

703722A (Replaces7037220) 11/99